Powertech

The Power of Trust. **The Future of Energy.**

# WECC MVS Meeting May 2023

# Hydro Generator Rehabilitation Effects on Dynamic Modelling


**Presented by:** Eric See-Toh, P.Eng.
Eric.SeeToh@powertechlabs.com

**Prepared by:** Michael Xia, M. Sc., P.Eng.
Michael.Xia@powertechlabs.com

Yasas Rajapakse, M. Sc., EIT
Yasas.Rajapakse@powertechlabs.com


MAY 2023

# Goal & Agenda

- **Help describe how the machines and controls are changing.**
- **Define: What is Rehabilitation?**
- **Equipment & Operational Changes**
- **Discuss Challenges**
- **Questions & Answers**

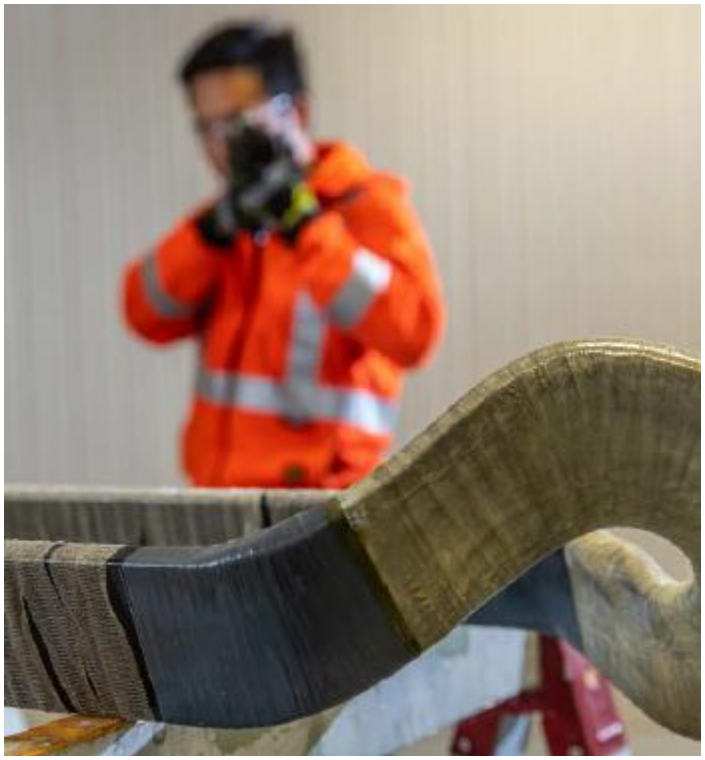

# MOD-026/027 Wording (Deep Dive)

**Standard MOD-026-1 — Verification of Models and Data for Generator Excitation Control System or Plant Volt/Var Control Functions**

**A. Introduction**

1. **Title:** Verification of Models and Data for Generator Excitation Control System or Plant Volt/Var Control Functions
2. **Number:** MOD-026-1
3. **Purpose:** To verify that the generator excitation control system or plant volt/var control function[1] model (including the power system stabilizer model and the impedance compensator model) and the model parameters used in dynamic simulations accurately represent the generator excitation control system or plant volt/var control function behavior when assessing Bulk Electric System (BES) reliability.
4. **Applicability:**

**4.1. Functional Entities:**

**4.1.1** Generator Owner

**4.1.2** Transmission Planner

**4.2. Facilities:**

For the purpose of the requirements
connected to the Bulk Electric Syste
"applicable unit" that meet the follo

**4.2.1** Generation in the Easte
characteristics:

**4.2.1.1** Individual gene
rating).

**4.2.1.2** Individual gene
that are directly
generation grea
rating).

**4.2.2** Generation in the West
characteristics:

**4.2.2.1** Individual generating unit greater than 75 MVA (gross nameplate rating).

**4.2.2.2** Individual generating plant consisting of multiple generating units that are directly connected at a common BES bus with total generation greater than 75 MVA (gross aggregate nameplate rating).

[1] Excitation control system or plant volt/var control function:

a. For individual synchronous machines, the generator excitation control system includes the generator, exciter, voltage regulator, impedance compensation and power system stabilizer.

b. For an aggregate generating plant, the volt/var control system includes the voltage regulator & reactive power control system controlling and coordinating plant voltage and associated reactive capable resources.



**R4.** Each Generator Owner shall provide revised model data or plans to perform model verification[4] (in accordance with Requirement R2) for an applicable unit to its Transmission Planner within 180 calendar days of making changes to the excitation control system or plant volt/var control function that alter the equipment response characteristic.[5] *[Violation Risk Factor: Lower] [Time Horizon: Operations Planning]*

# Rehabilitation

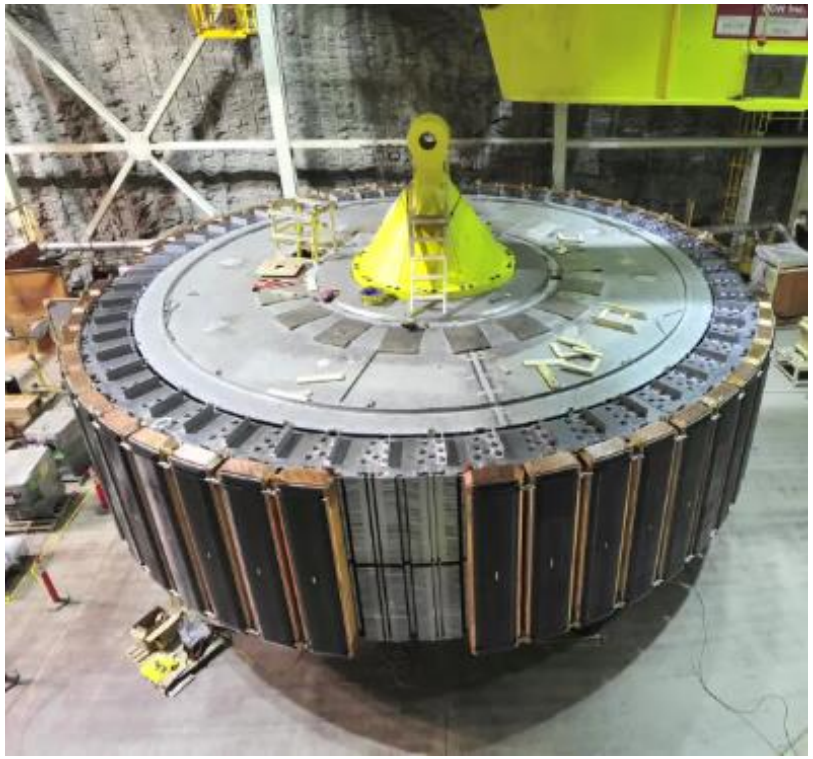

*YouTube video preview from https://www.youtube.com/watch?v=MrPzmhay_BE.*
*Video posted by user "Castanet News", "BC Hydro Mica Dam Upgrades".*

- **What is it?**
  - Asset renewal
  - New stators, generators
  - Replacement rotors
  - New T&G
  - Re-runnering of existing units
  - Exciters
  - Governors
  - Plant Controls
  - Increased Capacity

# Repair or Replace

- **The age of the digital treadmill.**
- **Analog systems are disappearing.**
- **Expertise is declining, and replacement is the low-risk option.**
- **Industry is replacing generation 1 and 2 digital controls beside original analog systems**
- **Cyclic loading**
    - Machines are getting cycled
    - Changes in operating context

# Risk Drives Change

- **Liability is a form of risk, replacement is a universal option for all parties.**
- **Staff attrition and migration**
- **Deferred investments**
- **“Upgrade” or is it “conversion”**
- **Adding features or reliability concerns?**
- **Asset management is here.**
- **No easy answer**

# Rehabilitation

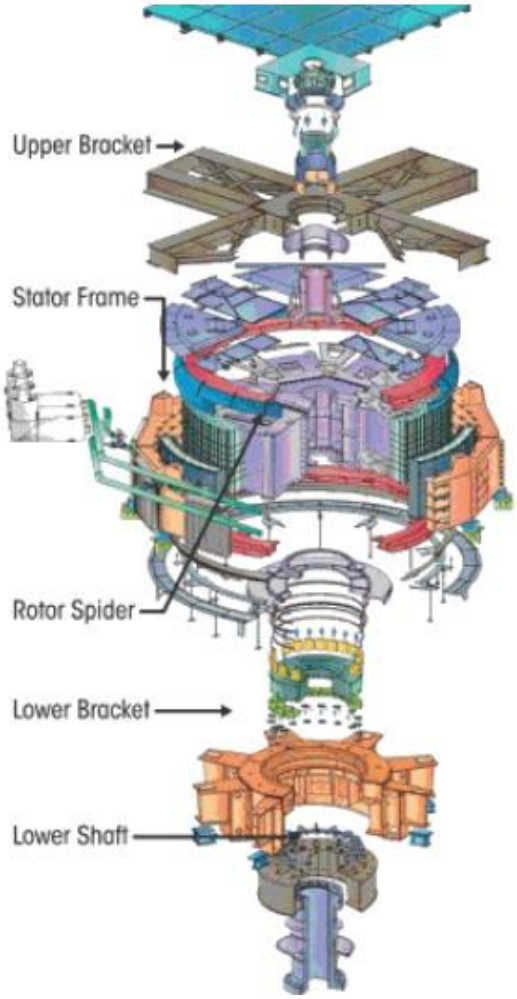


## Need

- Asset renewal
- Turbine efficiency across all runner types.
- Plant discharge and fish friendly turbines.

## Asset Life

- T&G still has the typical long life.
- Protection, excitation and governors have a lower replacement life (digital treadmill).
- 2nd and 3rd generation digital controls common.
- 1990's/2000's controls are being replaced side by side with original analog systems

## Workforce

- Workforce has changed.
- Tolerance for analog controls declining.

Powertech
The Power of Trust. The Future of Energy.

Figure attained from "https://www.hydroreview.com/technology-and-equipment/using-cameras-for-online-generator-2/#gref" . Hydro Review article "Using Cameras for Online Generator Monitoring", 2011.

# Like for Like Rehab?

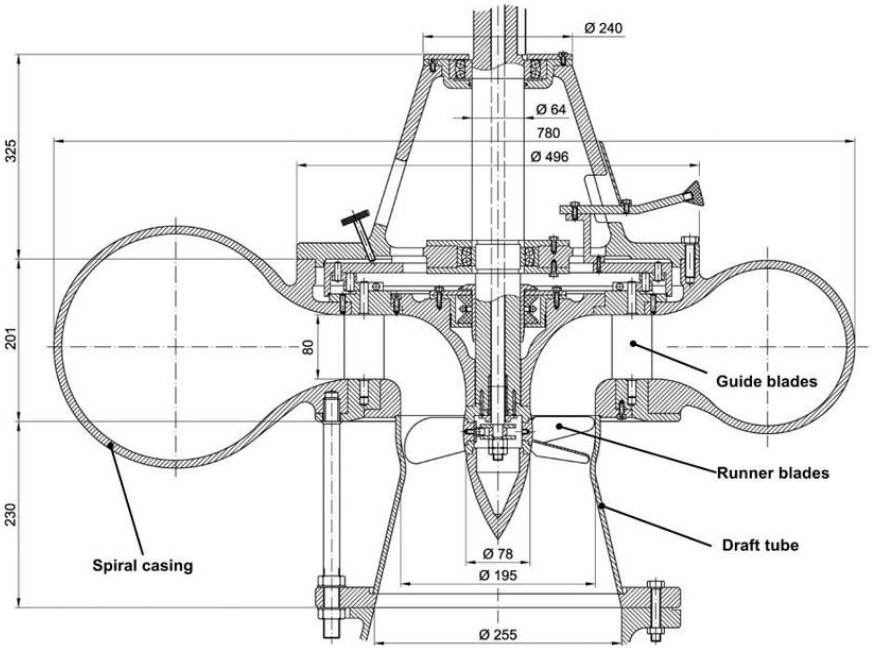


*Figure from Verification of Model Calculations for the Kaplan Turbine Design - Scientific Figure on ResearchGate. Available from: https://www.researchgate.net/figure/The-standard-4-K-69-Kaplan-turbine_fig2_322757647 [accessed 5 Apr, 2023]*

- **Rare.**
- **Efficiency and performance of runners have increased.**
- **Generators are being refurbished**
- **DC Exciters are disappearing**
- **Mass modernization**

# Prime Mover (Runner)

Permanent Change in Head

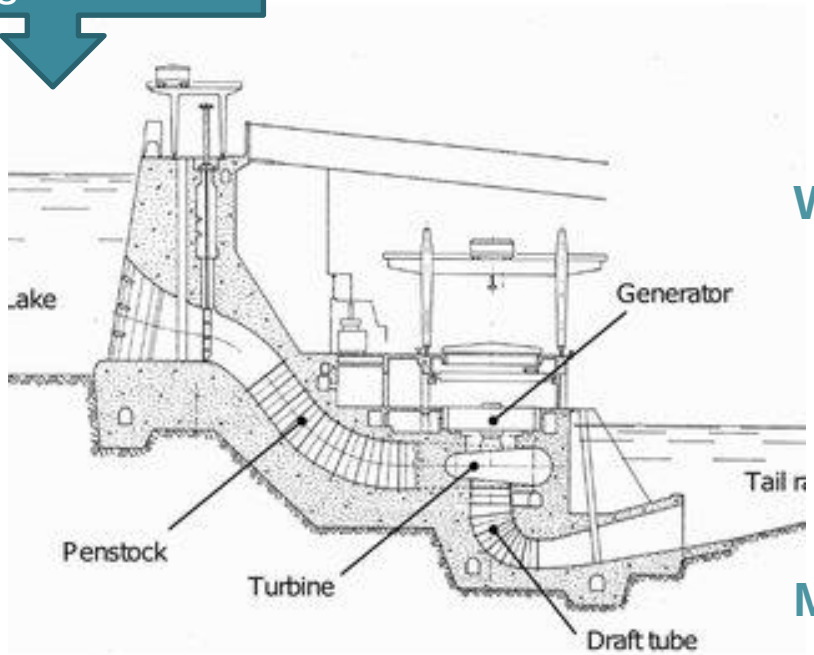


New Runner

## Change

- Some new runners are lighter, more power/efficiency or both
- Stay vanes, wicket gates, flow
- Draft tube reprofiling

## Why?

- Asset Renewal
- Mechanical Retirement
- Forced civil embedded component rehabilitation
- Uprate, efficiency or flow

## Model Effect

- Inertia
- Power versus Gate
- Significant change to gate timing
- Water Starting time

Powertech
The Power of Trust. The Future of Energy.

*Figure from Simulation, Analysis, and Mitigation of Vortex Rope Formation in the Draft Tube of Hydraulic Turbines - Scientific Figure on ResearchGate. Available from: https://www.researchgate.net/figure/Vertical-cross-section-of-a-hydropower-plant-Modified-from-Henry-8_fig4_276847493 [accessed 5 Apr, 2023]*

# Same Generator, new MVA with Runner

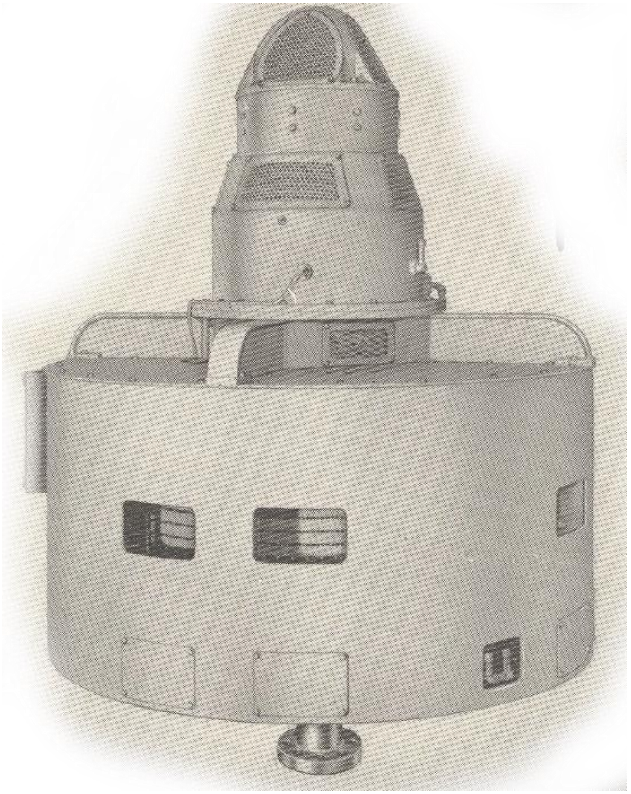

*Figure adapted from the cover of the "Small Vertical Waterwheel-Driven A-C Generators, Brochure", Westinghouse Electric & Manufacturing Company, 1944*

## Change

- Increased MVA on the same generator

## Why?

- New turbine within the capacity of an over-dutied generator.
- Affordable solution

## Model Effect

- MVA base change affecting many parameters.
- New operation in regions of higher saturation online.
- Inertia changes & associated turbine governor changes.

# Stator Changes

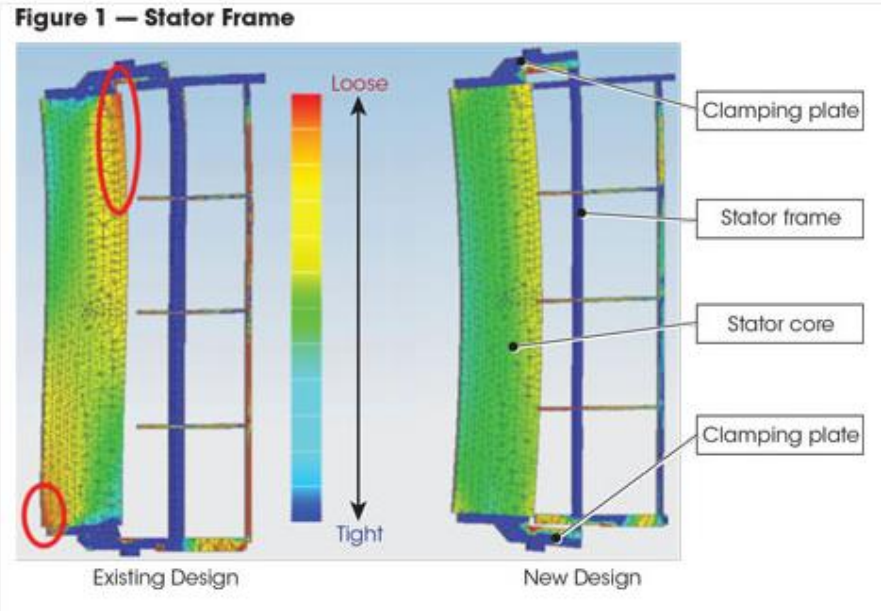


Figure sourced from "https://www.hydroreview.com/world-regions/major-overhaul-boosts-performance-at-ludington-pumped-storage-plant/" *Hydro Review Article "Major Overhaul Boosts Performance at Ludington Pumped-Storage Plant", 2016*

## Change

- Various major components of the magnetic circuit
- Examples (core depth, slot count, tooth profile, iron magnetics, stainless clamping components, split removal, diameters, nominal air gap)

## Why?

- Thermal Aging
- Asset Renewal
- Core degradation
- Mechanical Retirement
- Uprate

## Model Effect

- Can be drastic

# Stator Winding

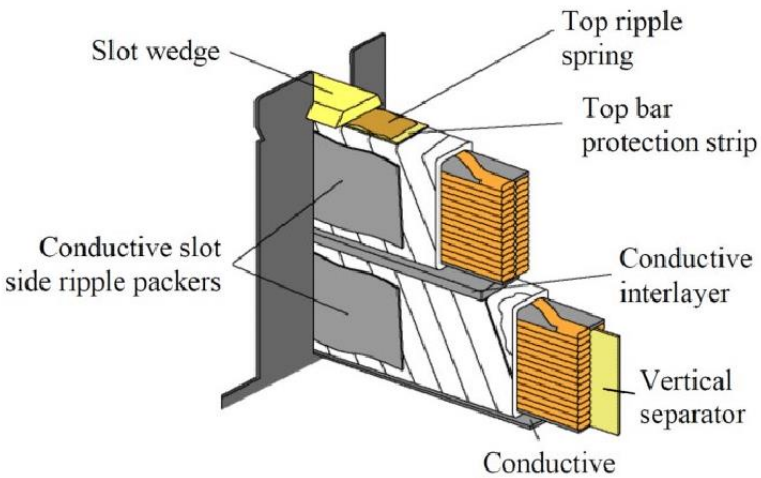


*Figure from Numerical Simulation of Discharge Activity in HV Rotating Machine Insulation - Scientific Figure on ResearchGate. Available from: https://www.researchgate.net/figure/Corona-protection-layers-in-Resin-Rich-technology-4_fig1_331702946 [accessed 5 Apr, 2023]*

## Change

- Rarely like for like copper cross section
- Roebel conversions
- Circuit Reconnections
- Usually MVA uprate
- Can be more scope than just winding
- Transpositioning

## Why?

- Asset Renewal
- Opportunity Upgrade

## Model Effect

- Vee Curve, OCC, D-Curve all change.
- Saturation limits changed, either improved or operating in a region of more saturation.

# Stator Core (and or Frame)

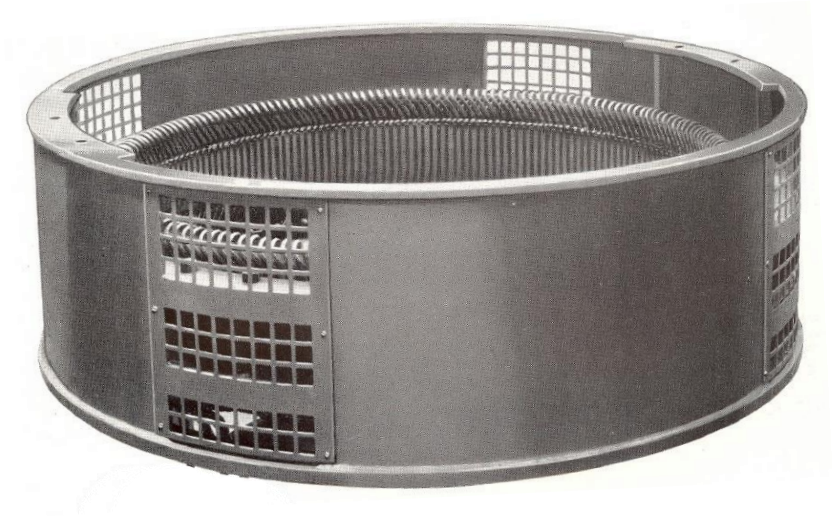

*Figure Adapted from "General Electric – Vertical Waterwheel-Driven Generators" by The General Electic Company, 1930, Bulletin GEA-820A Fig 1, Page 5. Retrieved from Google search query.*

## Change

- Magnetics pound for pound are better
- Can be change in slots
- Can be change in air gap
- Many leakage flux components changed to stainless
- Continuous pile

## Why?

- Asset Renewal

## Model Effect

- Several
- It's really not the same machine

# Pole & Rotor Modifications

Figure sourced from *https://www.hydroreview.com/world-regions/proactive-repair-of-the-helms-pumped-storage-plant/#gref*. *Hydro Review Article* "Proactive Repair of the Helms Pumped-Storage Plant", 2013.

# Pole Geometry – General Overview

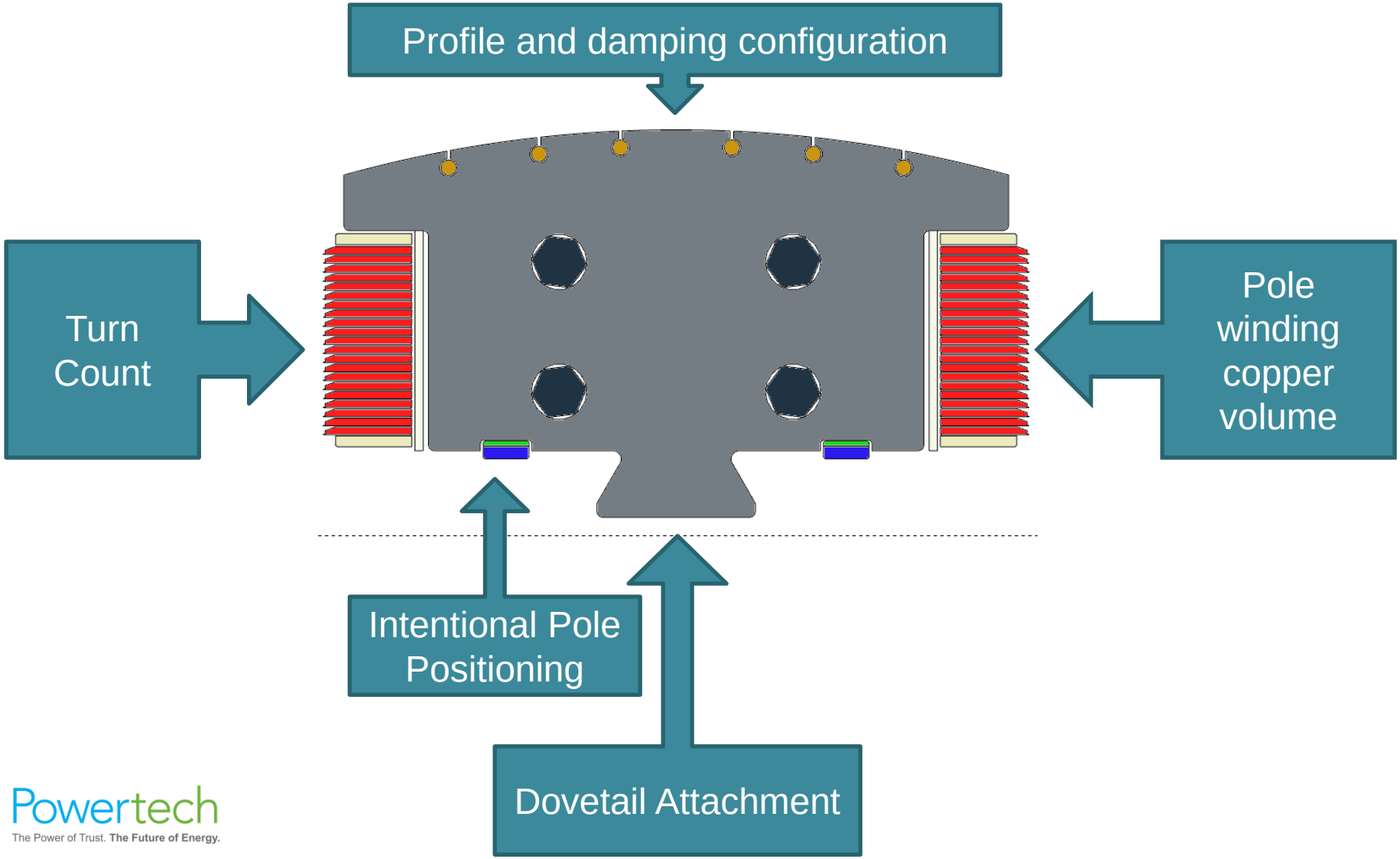


Powertech
The Power of Trust. The Future of Energy.

# Pole Position and Shape

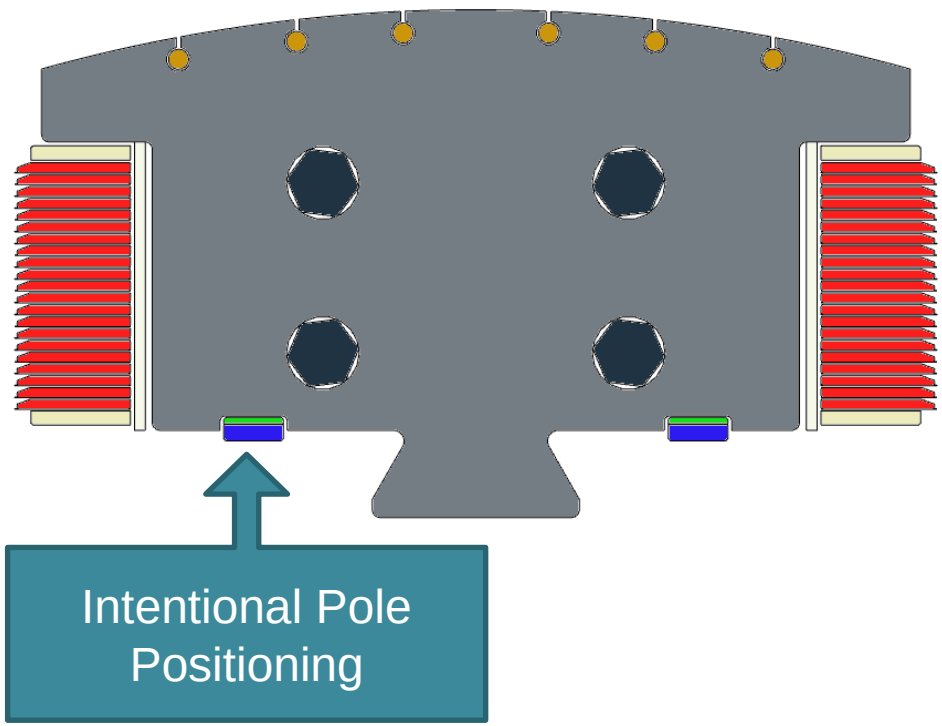


## Change

- Replacing the entire pole piece
- Moving the radial position of the pole (intentional)
- Mass and Inertia

## Why?

- Original design defect
- Change in capability

## Model Effect

- Direct change in field current requirements
- Direct change in magnetic saturation

# Pole Winding

*Figure sourced from Google search query.for rotor pole reinsulation. Photo was publicly viewable from Wajax Delstar Energie, "https://delstarenergie.com/rotor-pole-manufacturer-and-refurbishing-services/"*

## Change

- Replacing the entire pole winding
- Increasing copper cross section
- Reducing $R_f$
- Mass and Inertia
- Turn count

## Why?

- Machine Uprate
- Temperature capability
- Cooling fins

## Model Effect

- Saturation curve
- Direct impact to Inertia
- T'do is sensitive to $R_f$
- $E_{fdbase}$ changes with $R_f$

# Generator Cooling System

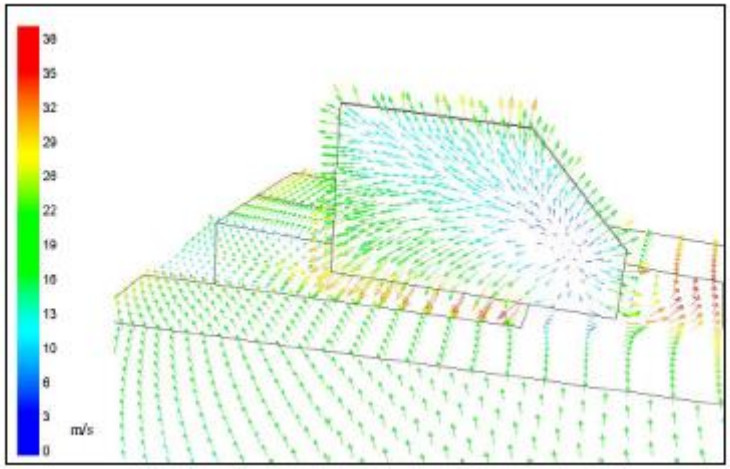


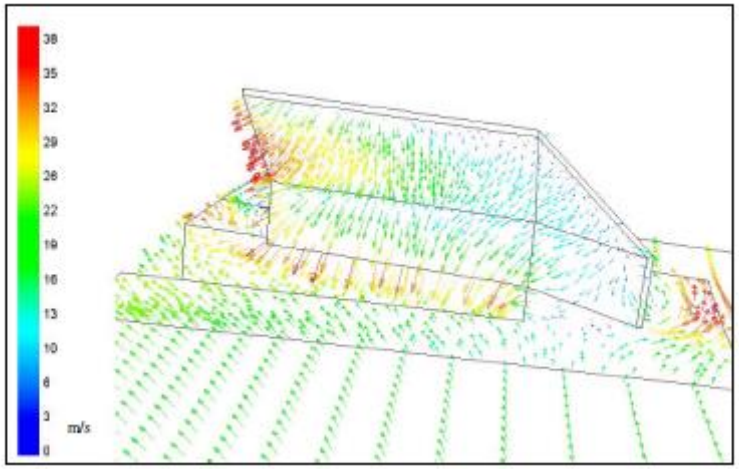


## Change

- Modified generator cooling
- Variance in prime mover windage losses.

## Why?

- Improvement in cooling volume or ventilation design enhancement/deficiencies

## Model Effect

- Inertia response and load rejection.

*Figure sourced from "Redesigning the Rotor Fan Blades to Improve the Cooling of Roxburgh's Hydro-Generators" by B. Liddell, A. Tucker, I. Huntsman, M. Manders and C. McDonald, 14th Australasian Fluid Mechanics Conference Adelaide University, Adelaide, Australia December 2001*

# Rotor Changes

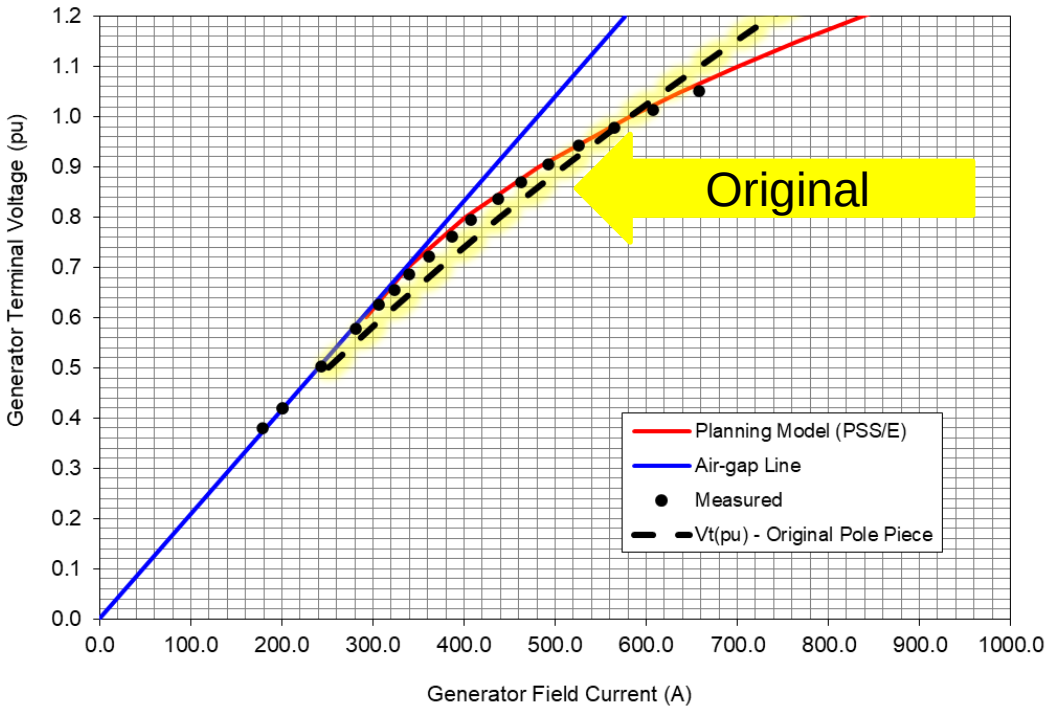


## Change

- New rotors
- New Poles
- Change in pole attachment
- Change in Windage
- Change in air gap

## Why?

- New Machine
- Rotor retirement

## Model Effect

- Several impedances will move

# Rotor Replacement Example

## Change

- New Spider, rim and pole pieces
- Same pole winding design
- Change in dovetail attachment
- Uprated from 333 to 366MVA
- New Runner

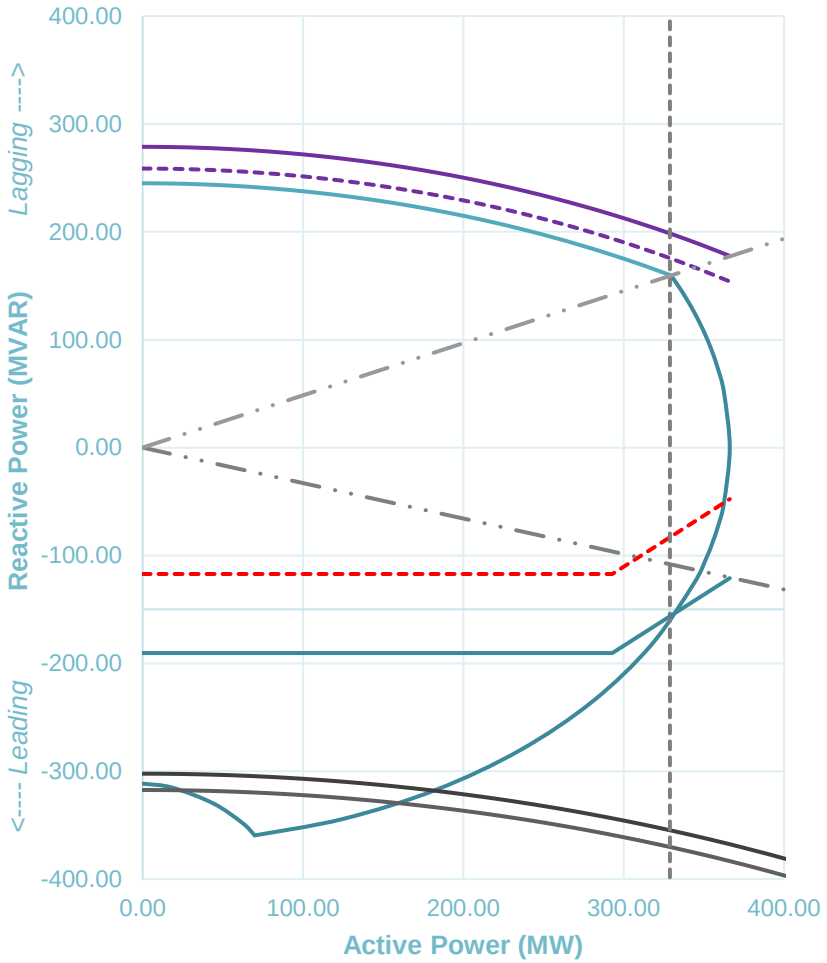


Powertech
The Power of Trust. The Future of Energy.

# Rotor Replacement Example

| Parameter | New Rotor | Original Rotor |
|---|---|---|
| T'do | 6.343 | 6.1 |
| T"do | 0.03 | 0.03 |
| T'qo | 0 | 0.078 |
| H | 4.5 | 4.9 |
| Xd | 1.17 | 0.92 |
| Xq | 0.6375 | 0.58 |
| X'd | 0.29 | 0.31 |
| X"d | 0.23 | 0.17 |
| Xl | 0.16 | 0.15 |
| S(1.0) | 0.09 | 0.13 |
| S(1.2) | 0.25 | 0.43 |

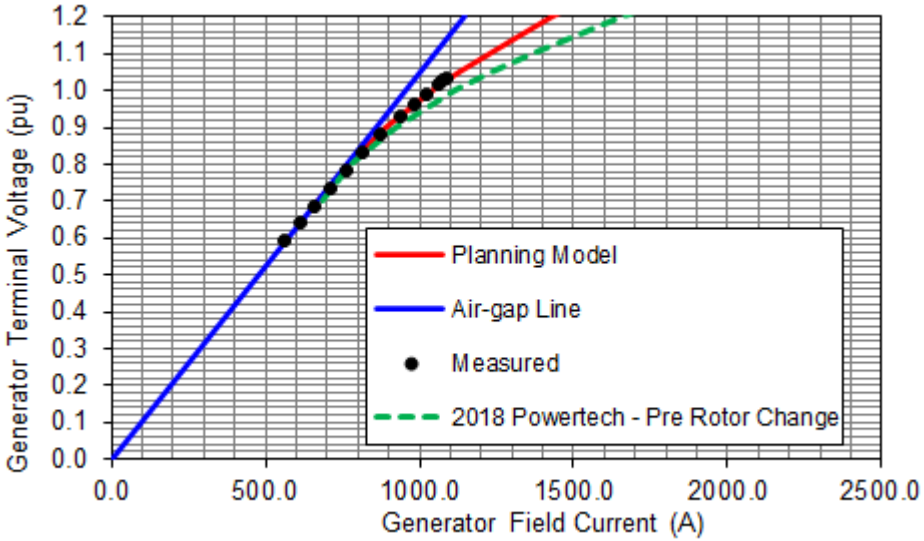


## Change

- New Spider, rim and pole pieces
- Same pole winding design
- Change in dovetail attachment
- Uprated from 333 to 366MVA
- New Runner

Powertech
The Power of Trust. The Future of Energy.

# Rotor Replacement Example

| Parameter | New Rotor | Original Rotor |
|---|---|---|
| T'do | 6.343 | 6.1 |
| T''do | 0.03 | 0.03 |
| T'qo | 0 | 0.078 |
| H | 4.5 | 4.9 |
| Xd | 1.17 | 0.92 |
| Xq | 0.6375 | 0.58 |
| X'd | 0.29 | 0.31 |
| X''d | 0.23 | 0.17 |
| Xl | 0.16 | 0.15 |
| S(1.0) | 0.09 | 0.13 |
| S(1.2) | 0.25 | 0.43 |

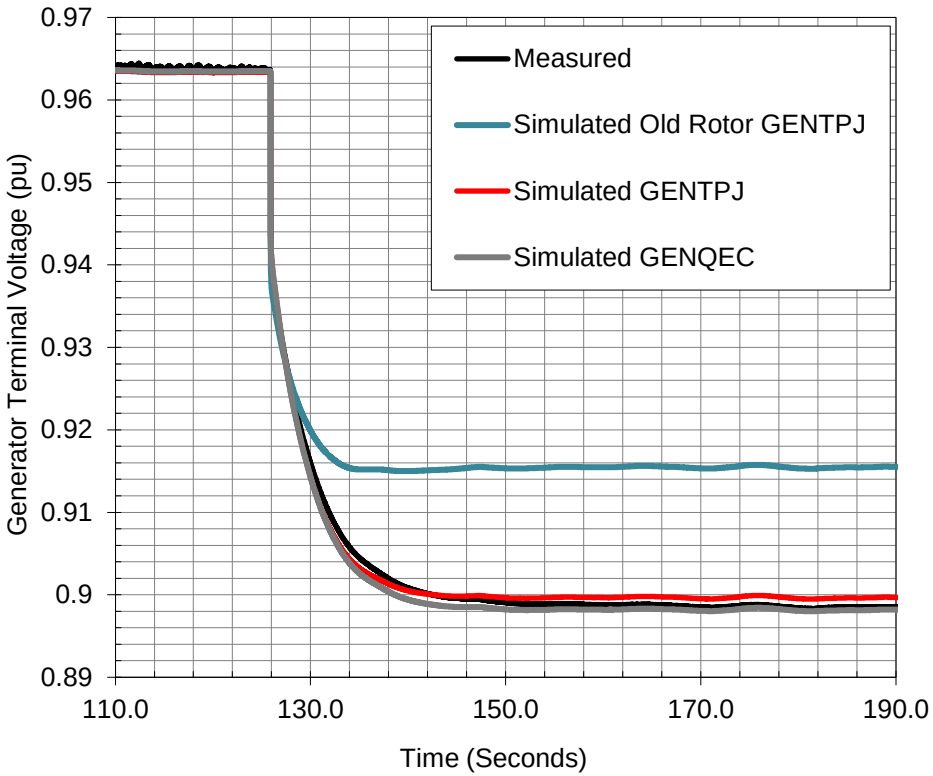


## Change

- New Spider, rim and pole pieces
- Same pole winding design
- Change in dovetail attachment
- Uprated from 333 to 366MVA
- New Runner

Powertech
The Power of Trust. The Future of Energy.

# Rotor Replacement Example

| Parameter | New Rotor | Original Rotor |
|---|---|---|
| T'do | 6.343 | 6.1 |
| T''do | 0.03 | 0.03 |
| T'qo | 0 | 0.078 |
| H | 4.5 | 4.9 |
| Xd | 1.17 | 0.92 |
| Xq | 0.6375 | 0.58 |
| X'd | 0.29 | 0.31 |
| X''d | 0.23 | 0.17 |
| Xl | 0.16 | 0.15 |
| S(1.0) | 0.09 | 0.13 |
| S(1.2) | 0.25 | 0.43 |

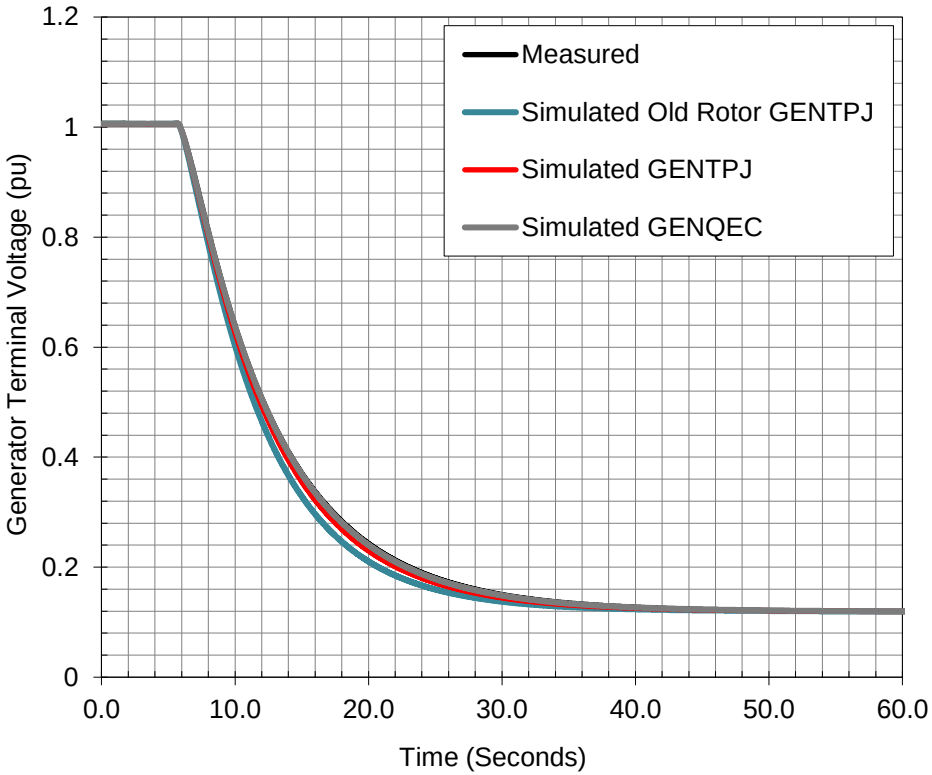


## Change

- New Spider, rim and pole pieces
- Same pole winding design
- Change in dovetail attachment
- Uprated from 333 to 366MVA
- New Runner

Powertech
The Power of Trust. The Future of Energy.

# Exciter Changes

- Physical Removals
- New AVR or Exciter
- Excitation of modal oscillation
- Need for PSS damping can become apparent

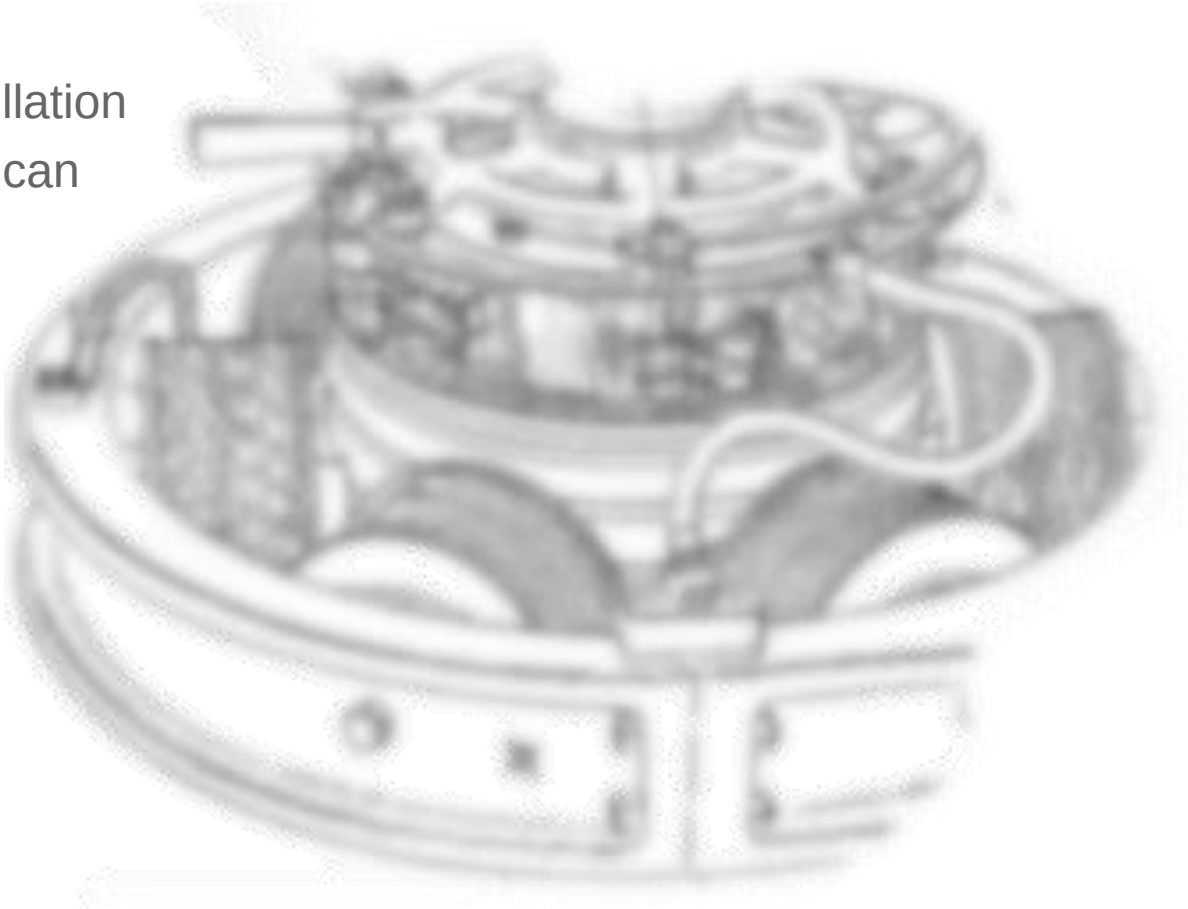

# The Obvious

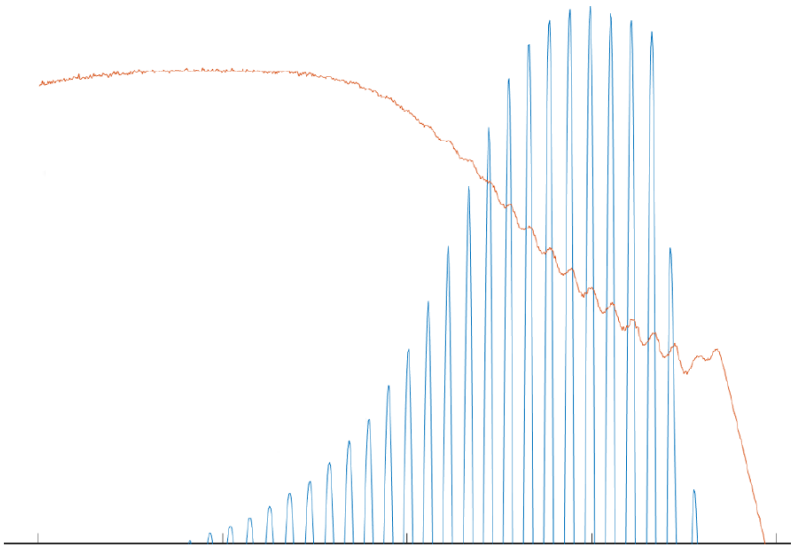

## Change

- New Exciter
- New AVR

## Why?

- Obsolescence, Reliability
- Modernization
- Conversion to Static
- Conversion to Brushless
- Remove one stage of Brushed Exciter

## Model Effect

- Can be drastic

# Pilot Exciter Reconnection/Upgrades

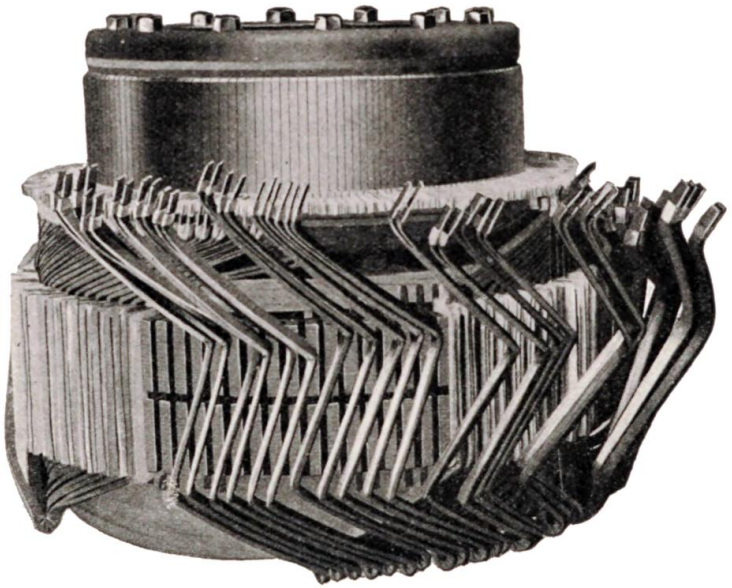

*Figure obtained from Wikipedia searh for "armature (electrical)". Reference web address https://en.wikipedia.org/wiki/Armature_(electrical). Wikipedia photo source noted as By Hayward, Charles B. - Modern Radio Practice pg 47 https://archive.org/details/modernradiopract00hayw/page/47, Public Domain, https://commons.wikimedia.org/w/index.php?curid=85936098*

## Change

- Reconnection of the pilot (shunt field) and the interpole series field with the installation of the static pilot AVR.
- New PID and forcing capabilities

## Why?

- Static pilot AVR upgrade from a previous analog systems (such as Mag-Amp technology or mechanical AVR)

## Model Effect

- Excitation model structure
- Exciter saturation curve
- Introduction of negative field forcing and limiters

# Conversion to Static – Stub Shaft

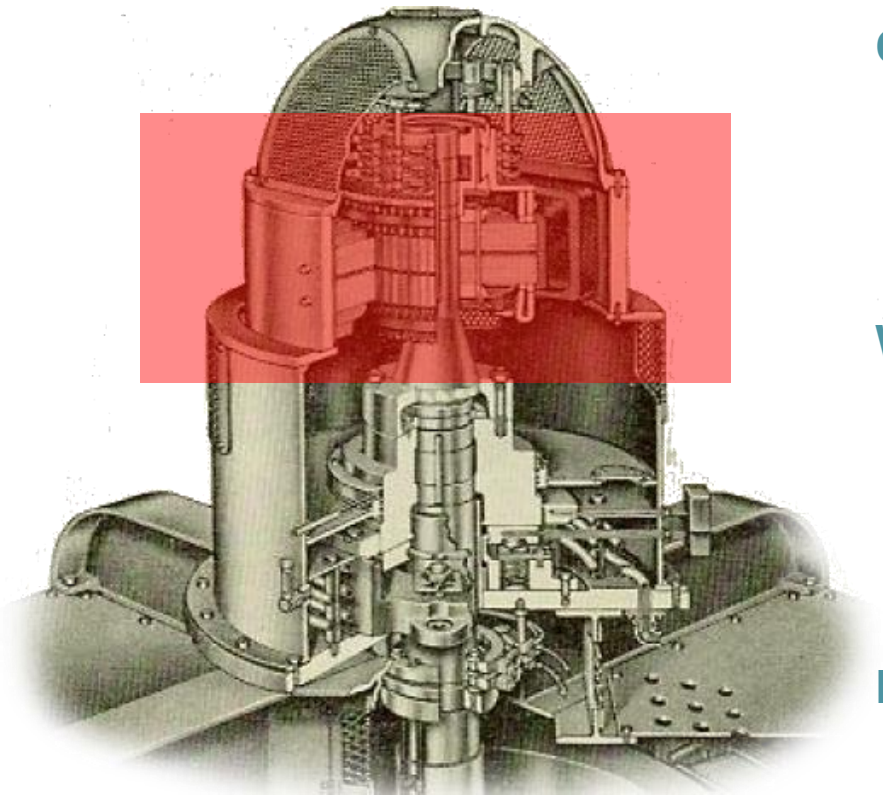

*Figure Adapted from "Westinghouse – Vertical Water Wheel Synchronous Generators Instruction Book" by Westinghouse Electric & Manufacturing Company, 1944, I.B. 7240 Fig 3, Page 8. Retrieved from Google search query.*

## Change

- Retiring the rotating machine
- Retirement of one pilot stage
- Stub shaft replacement

## Why?

- Obsolescence, Reliability
- Modernization
- Conversion to Static

## Model Effect

- Excitation model structure
- Inertia
- Reliance from station service
- Independence from grid connection

# Broken Damper Links

*Figure from "DirectIndustry.com, Laminated Shunt". Retrieved from Google search query.*

## Change

- Some machines suffered crack links due to relative pole motion, or cyclic fatigue mechanisms
- Common to remove

## Why?

- Maintenance failure mode

## Model Effect

- Change in the damping circuit (transient based impedances)

# New Runners & Governors

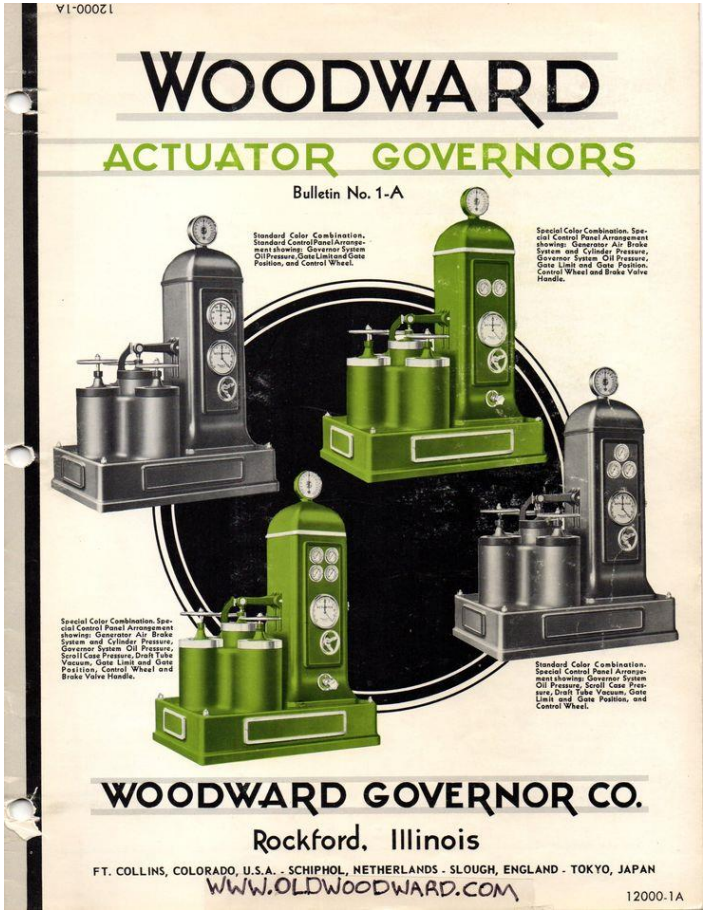


- **Governor**
  - Perhaps you keep the original governor,
  - New PID settings
  - Change in SNL
  - Gate timing
  - Servo Cushioning

- **Turbine**
  - New no load zones
  - Power vs gate response
  - Inertia

*Figure from http://www.oldwoodward.com. Cover of the Woodward Type A Actuator Bulletin 1-A, Woodward Governor Company, Early 1900's.*

# Mechanical to Digital Conversions

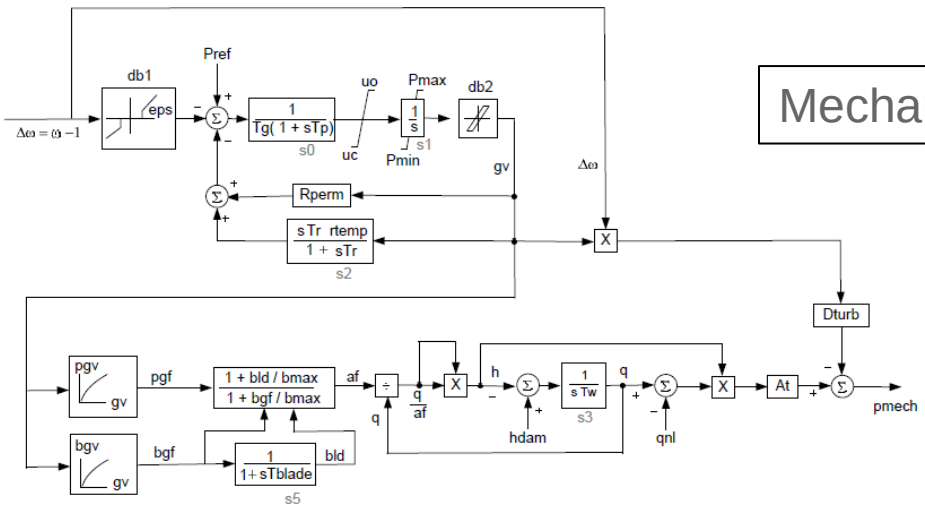


Mechanical Hydraulic

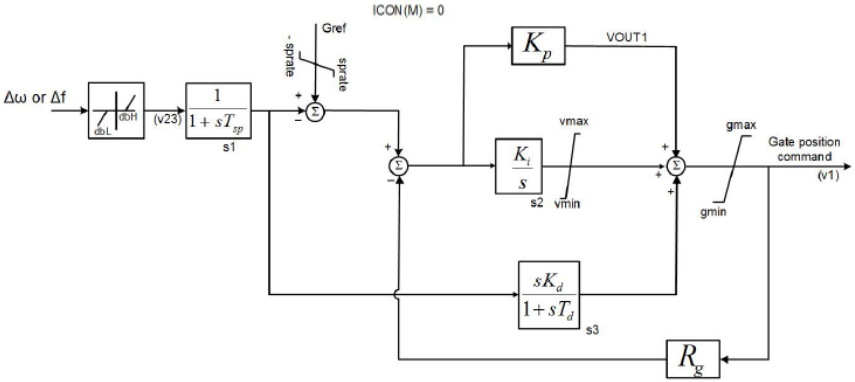


PLC Digital Control Head

Powertech
The Power of Trust. The Future of Energy.

# Model Conversion (WSHYGP – HYG3)

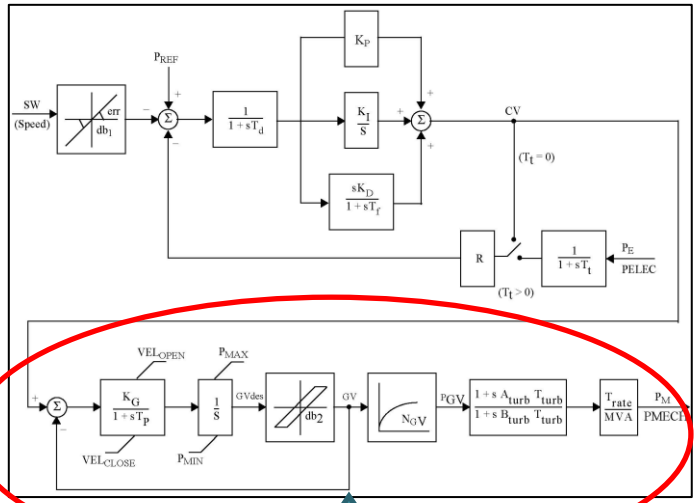


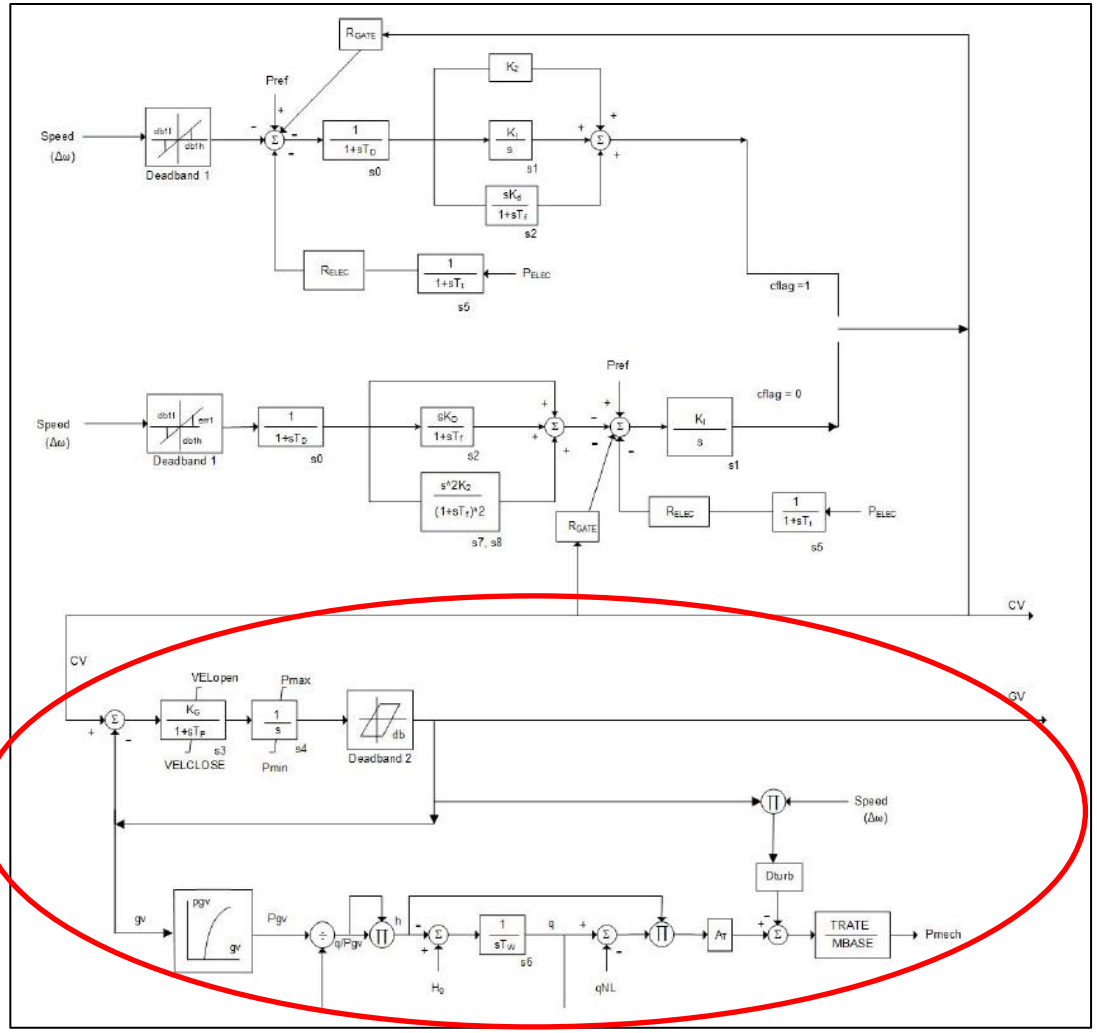


Powertech
The Power of Trust. The Future of Energy.

# Which one is the Digital Governor?

- **Know your operational goal**
- **Ensure there is a focus on technical training.**
- **We can always model the response.**
- **In model validation, do not assume that NERC Testing equals good performance.**

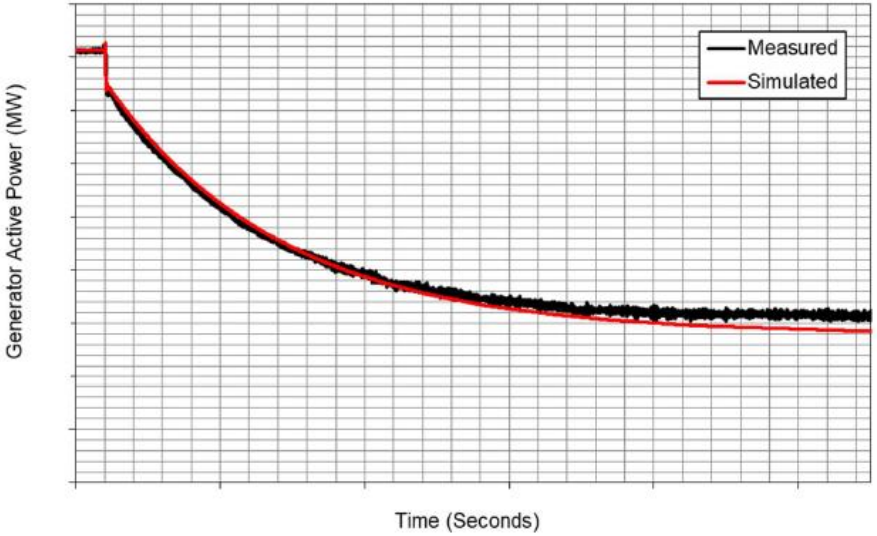


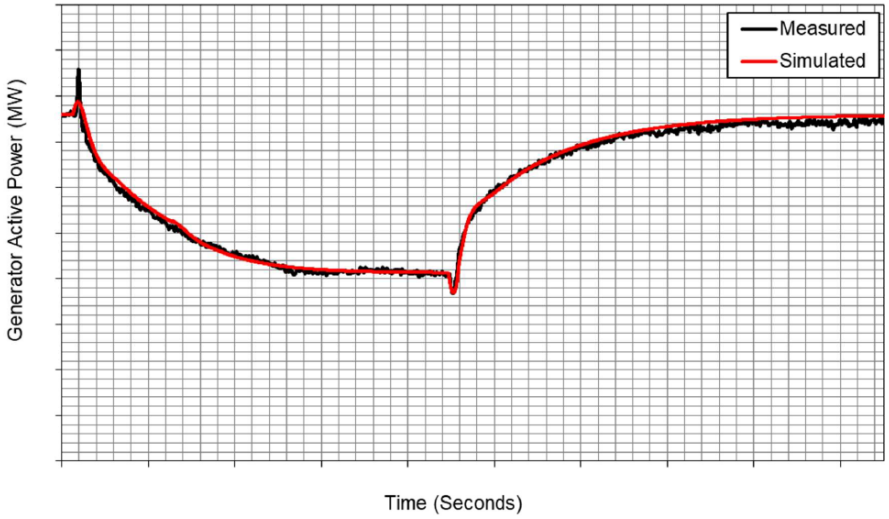

# DCS/PLC Plant Controls

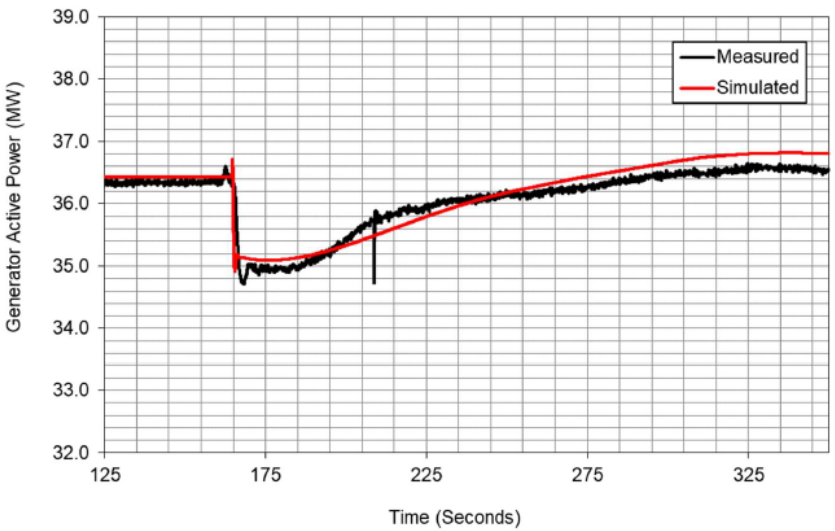


## Change

- Plant level or unit level controls affecting governor frequency control.
- Addition Power Order controls anti-drooping the station.

## Why?

- Modernization controls
- De-staffing and automation
- “Upgrade”

## Model Effect

- Implementation of load control model.
- May require a UDM to represent overall plant response.

# What are the control options?

- **Know your operational goal**
- **Meet interconnection governor control requirement**
- **Represent advanced control logic**
- **Consider your study time frame and if AGC or other advanced joint load controls are being modeled**
- **In some instances, HIL testing and validation.**

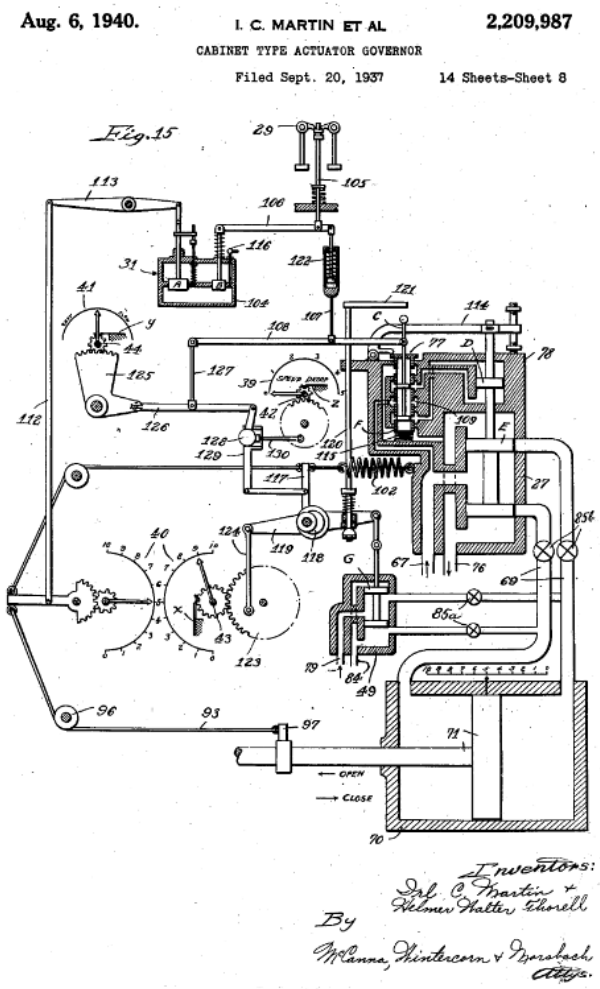


*Figure sourced from Google Patents, US Patent Number US2209987A, Irl C Martin, Thorell Helmer Walter, Woodward Governor Company, 1937*

# Concluding Statements

- **Equipment changes can affect your MOD model compliance.**
- **Rules previously did not exist, and model creation/validation was performed only by utility best practices.**
- **MOD-026/027 are capturing changes.**

Powertech

The Power of Trust. **The Future of Energy.**

# Questions and Answers

**www.powertechlabs.com**
**Michael.Xia@powertechlabs.com**
**Eric.See-Toh@powertechlabs.com**